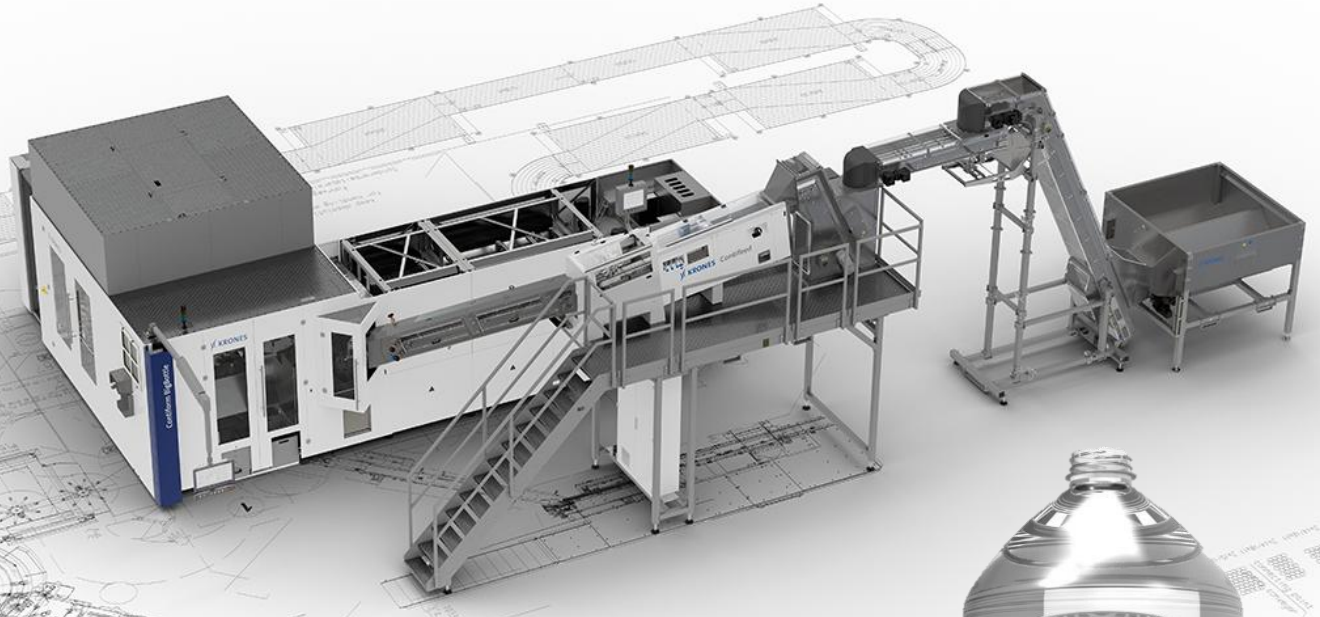

Contiform BigBottle

High output for large containers

KRONES

The new Contiform BigBottle
Bigger and better

What is the main characteristic of the Contiform BigBottle? It's obvious: "bigger and better". Whether we are talking about output per cavity, flexibility, efficiency or reliability - this blow moulder masters every challenge brilliantly.

At a glance

Container and product range
- Containers from 2.0 to 8.0 litres and diameters up to 190 mm
- Cylindrical, square and rectangular containers
- For non-carbonated beverages and edible oil

Machine portfolio
- 10 to 14 blowing stations

Output per hour
- Production of 8,000 to 16,800 containers per hour

The design

The Contiform has a modular design and can be individually equipped for to meet all requirements.

Basic machine

- Linear infrared heating module for processing preforms with a length of up to 160 mm and a support ledge diameter of up to 53 mm
- Blowing module with blowing stations for manufacturing containers of up to 8.0 litres

Optional modules

- Prejet preform interior cleaning system for pre-cleaning the incoming preforms
- PET-View inspection system for the integral quality control of preforms and containers
- Self-learning Contiloop AI process control for fully automatic and intelligent parameter adjustment

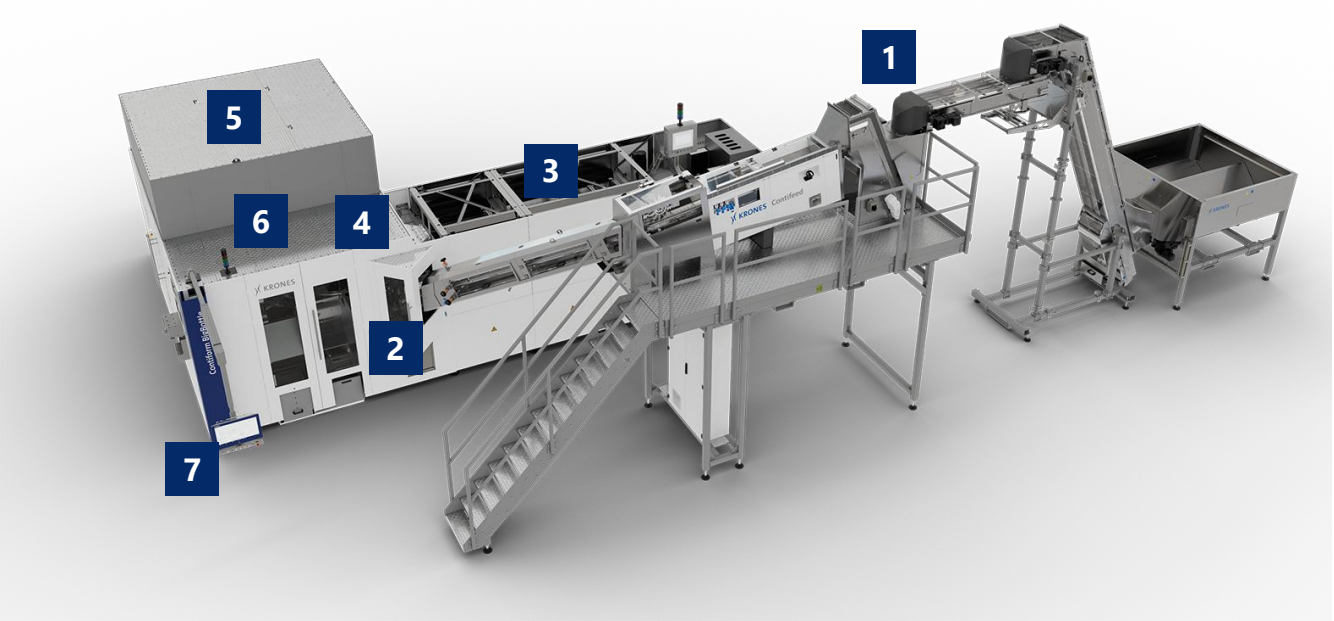

1	Preform feed system	5	Blowing module with blowing stations
2	Preform interior cleaning system*	6	Intelligent process control*
3	Infrared heating module	7	Touch-screen for machine operation
4	Preform/container inspection unit*		

* Options

The Contifeed preform feed system
Focussed on performance right from the beginning

At a glance

- Applicable with lightweight, standard and heavy preforms
- Three models – suitable for the respective blow moulder output
- Two variants of the feed rail:
  - Gravity system for all common preform types
  - Air-assisted – ideal for lightweight preforms and high-speed applications

- Optional:
  - Hygienic design
  - Soft-tilting preform tipper for a particularly gentle preform infeed

Benefits to you

- Automatic troubleshooting
- Quick and infinitely variable adjustment to every preform type

Infrared heating technology
Efficient and flexible

Heating tunnel

- Oven chain pitch for 36.4 mm, 50 mm and 2.8 mm
- Adjustable base reflectors: adjustable to the respective preform length
- Maintenance-free system of ceramic reflectors

Heaters

- Parabolic reflector for the top infrared emitter
- Longer infrared emitters and smaller dead spaces between the heaters

Benefits to you

- Up to 15 percent smaller footprint thanks to reduced deadspaces
- Improved lightweighting potential through targeted heating of the preforms directly below the support ledge
- Up to 5 percent lower heating energy consumption due to shorter distances and parabolic emitter technology

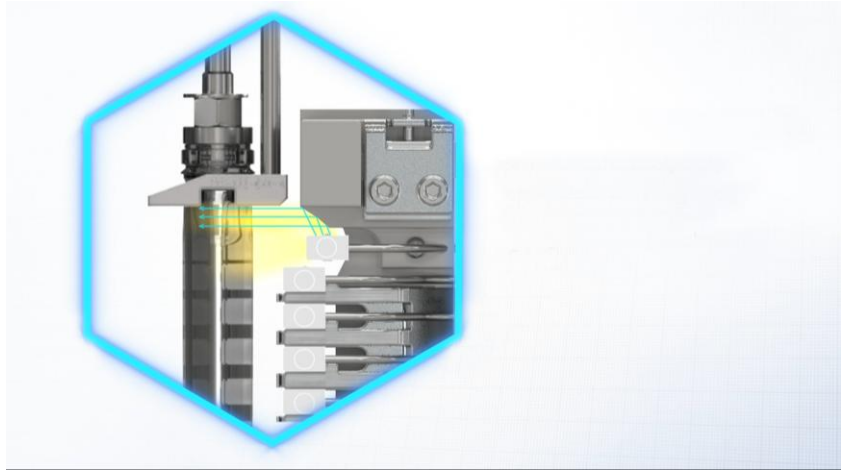

KRONES

The Contiform BigBottle blowing module
Robust and precise

Transfer system

- Five-point heating mandrel in the linear oven
- Only four internal horizontal preform and container transfer points
- Actively controlled transfer grippers

Platform and drive technology

- Torsion-resistant platform construction with skip-and-run technology
- Five high-precision Monotec servo motors with real-time synchronisation

Benefits to you

- Precise transfer of preforms and bottles
- Perfectly suited for very light preforms
- No PET dust deposit
- No change of handling parts if the neck finish remains the same
- Significantly reduced scrap rate thanks to skip-and-run technology

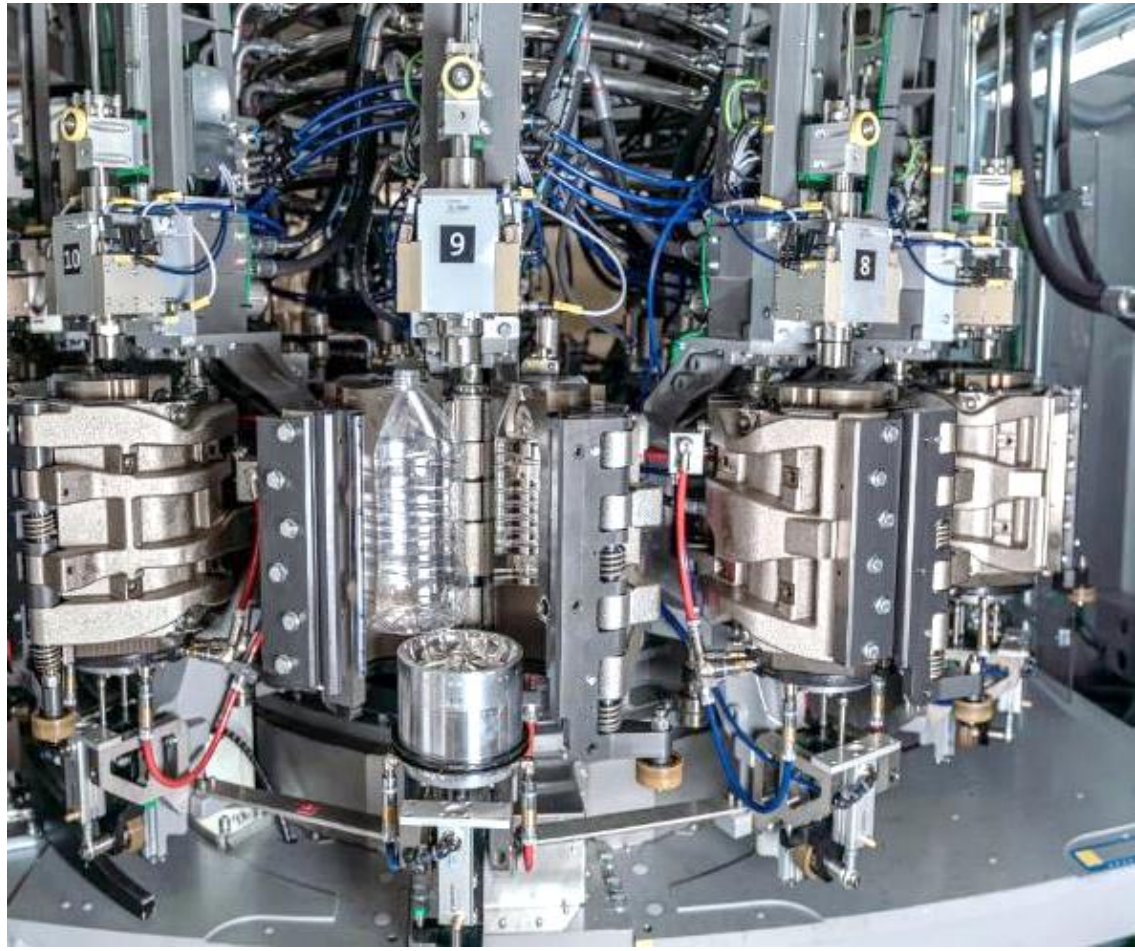

KRONES

The blowing stations
Intelligent while saving on compressed air

Blowing stations

- Electromagnetic stretching system without air consumption
- Extremely low dead space volume in the entire blowing station

Compressed-air recycling

- Once again a further developed compressed-air recycling system, the Air Wizard Triple
- With intermediate pressure stages for internal recovery of the compressed air
- Automatic self-optimisation of the blowing air recycling process
- Considerably lower valve switching time dispersion

Benefits to you

- Up to 30 percent less blowing air consumption in comparison to the valve technology used up to now
- Avoidance of potential incorrect settings
- Larger process windows thanks to increased accuracy of the blowing process

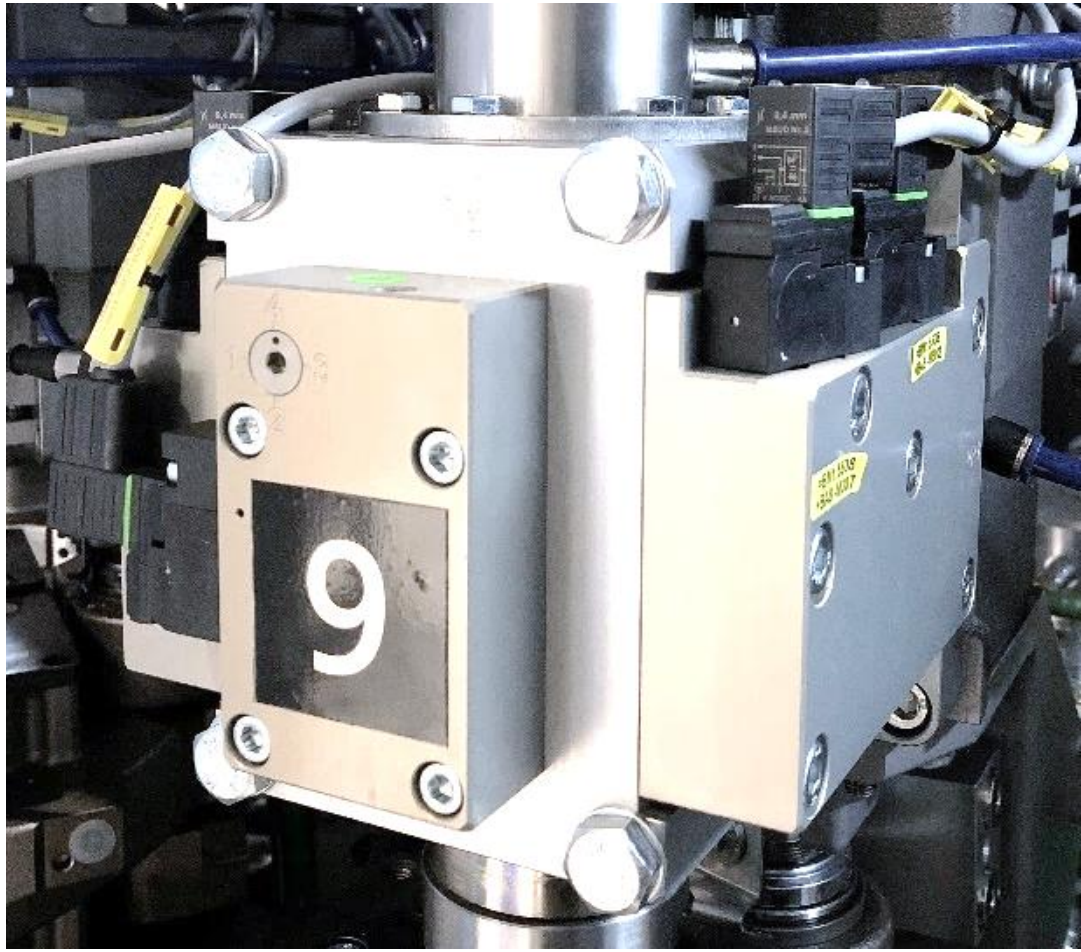

KRONES

Container design and moulds
Creative and in line with the market

At a glance

- Four production centres worldwide with state-of-the-art manufacturing technology
- Container design experts at all four locations
- Design and production of mould types for all Contiform series
- Mould validation on our own technical centre systems

Benefits to you

- Customer-oriented consulting: Creative, functional, unique
- Individual designs with a view to customer requirements and feasibility in the beverage line
- Experience from more than 20,000 moulds per year

* (e.g. robot-compatible)

KRONES

Optional: Prejet preform interior cleaning system*

Dust and other particles do not stand a chance

At a glance

- Removes macroparticles from PET preforms using immersed lances and ionised air
- Suctions off the particles and filters them out
- Optional: Quick change of handling parts without tools

Benefits to you

- Compact integration in the infeed of the blow moulder: No additional footprint necessary
- Increased product safety thanks to a high and reproducible cleaning performance
- Fewer preform rejections thanks to reliable particle removal
- Efficient use of the compressed air required

* Dependent on the oven chain pitch

Optional: PET-View preform and container inspection unit
Fully integrated quality control

At a glance

- Preform inspection: Only flawless preforms enter the blow-moulding process.
- Container inspection: Only perfectly blown containers are passed on to the filler.
- Operation on the touch-screen of the blow moulder

Benefits to you

- 100 percent inline inspection during production
- Accurately detects faulty preforms/bottles and thus guarantees first-class container quality
- Detects contaminated preforms/bottles and rejects them reliably
- Suitable for both virgin material and up to 100 percent rPET

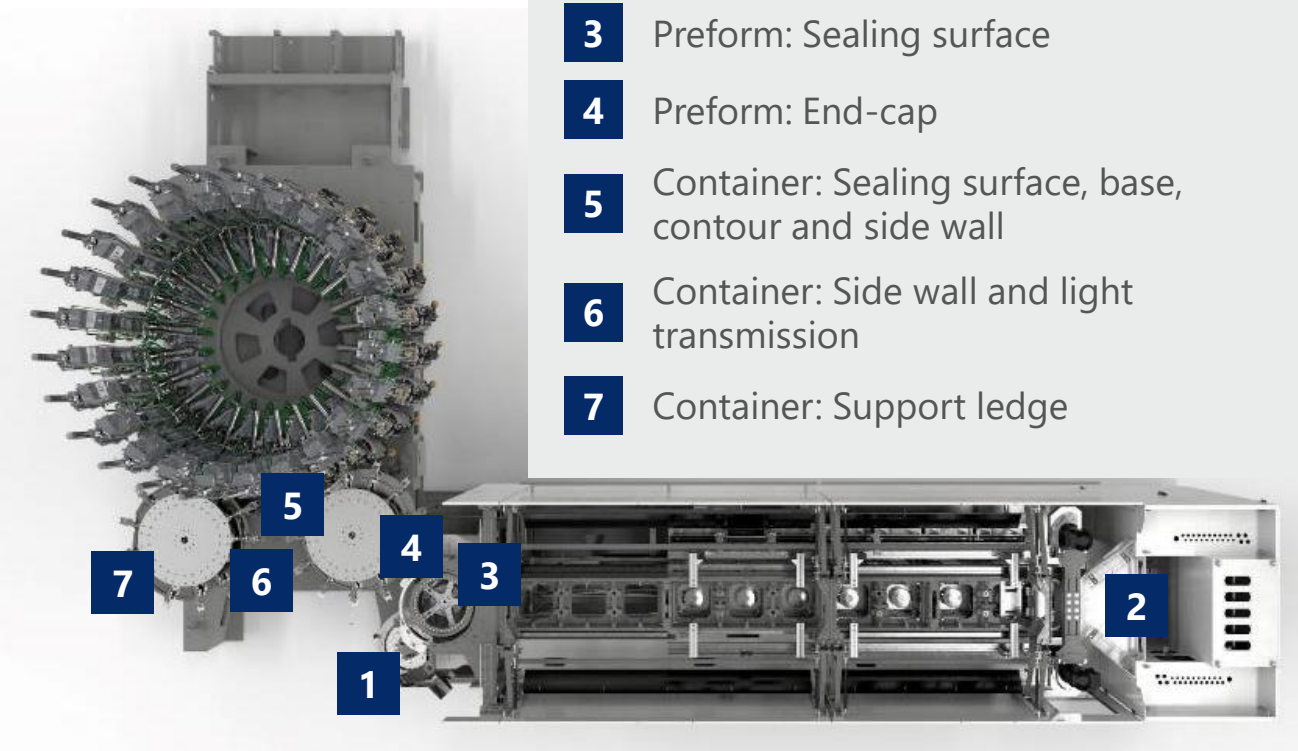

1. Preform: Gate
2. Preform: Side wall
3. Preform: Sealing surface
4. Preform: End-cap
5. Container: Sealing surface, base, contour and side wall
6. Container: Side wall and light transmission
7. Container: Support ledge

KRONES

Optional: Contiloop AI intelligent process control
Fully automatic and self-learning

At a glance

- Combination of hardware and software:
  - Intelligent process control and PLC based on artificial intelligence: AI
- In everyday operation:
  - Contiloop AI measures the most important container parameters, and also the environmental parameters inline and readjusts the blow moulding process if necessary.
- If major changes are planned:
  - The system is retrained via the Krones IIoT platform and thus learns how to adjust the blow moulding process precisely to the perfect bottle quality under the new conditions.

Benefits to you

- Insensitive to environmental changes thanks to environmental monitoring
- Insensitive to variations in the preform material (e.g. rPET content) thanks to automatic process control
- Stable container quality through inline quality control (light transmission measurement)
- Independent of the operator's know-how and experience
- Production of lightweight and rPET containers with high-precision process control

Optional: Contiform quick-change solutions

Because every minute counts

At a glance

- Quick-change handling parts for all Contiform models
- Several parts can even be changed completely without tools
- Simultaneous change-over of heating module and blowing module possible
- Quick mould change-over without tools

Benefits to you

- Quick-change procedures with easy handling and partially without tools
- Maximum efficiency in combination with LineXpress

KRONES

Better in combination: Contiform block solutions
A high output in a small space

Flexible block solutions

- Contiform Bloc: Blow moulder with filler or labeller
- Contiform Bloc BFL: blow moulder, filler, labeller

Compact block solutions for non-carbonated water filling

- Contiform Bloc BF-C: blow moulder and filler

- More than 50 years of experience in block technology
- More than 2,000 Contiform block solutions sold worldwide
- More than 80 percent of all Contiform blow moulders are supplied in block configurations.

KRONES

Benefits to you

Reduced heating energy consumption

The further optimised infrared heating technology made it possible to once again reduce the energy consumption for heating the preforms.

High-pressure air efficiency

The Air Wizard Triple can achieve a high-pressure air saving of up to 30 percent compared to the previous generation.

Production efficiency

With its sturdy design and new functions, such as skip-and-run, the new Contiform continues to operate with the utmost reliability and with even less interference than before.

Ergonomic design and user-friendliness

The servo drives in conjunction with the improved rotary joint continue to keep the noise level stress-free, even at the highest output rates. The new operating interface with large touch-screen allows for even more efficient working with the machine.

Requesting a new machine
You can easily send a request for a non-binding quotation in our Krones.shop.

Certified ecological efficiency
Machines with enviro seal

At Krones, the enviro label stands for excellent ecological efficiency. Products that bear the enviro label have proven in an objective test procedure that they efficiently use energy and media, and that they produce in an environmentally-friendly way. The requirements are defined by the EME standard that has been developed by TÜV SÜD (technical inspection authority) for assessing production plants. The enviro test procedure, too, has been certified by TÜV SÜD as an independent expert. Therefore, you can be sure that: an enviro label stands for ecological efficiency.

Why the new Contiform is enviro-classified

Energy efficiency

- Further optimised heating room and heaters for the lowest possible heating energy requirement

Compressed-air efficiency

- Further developed compressed-air recycling for the highest possible internal and external reuse of the blowing air

Environmental compatibility

- Further minimised lubricant consumption
- Use of components made of recycled material

KRONES

Everything from a single source

Training sessions at the Krones Academy – trained personnel for an increased efficiency of your line

The multifaceted offer by the Krones Academy ranges from operation, servicing and maintenance courses through to management training. We will gladly also create your individual training programme.

KIC Krones cleaning agents make your machine shine

Only if the production environment is immaculate, can your product be brilliant. KIC Krones provides you with the optimum cleaning agents and disinfectants for each individual production step.

Container design

Krones container design - creative, functional, unique with design and production of mould types for all Contiform series. Experience through approx. 20,000 moulds per year.

Krones Lifecycle Service – Partner for Performance

It goes without saying that also after the purchase of new machines, Krones takes care of your lines: The Krones LCS experts are always there to help you reaching your goals and turn your wishes into optimal LCS solutions.

KIC Krones lubricants for each production step

Whether for gears, chains or central lubrication systems – our greases and oils are true all-round talents. They can reach every lubrication point, protect your line and ensure gentle treatment for your products thanks to their food-grade quality.

KRONES

SOLUTIONS BEYOND TOMORROW

KRONES